STBB1xx

1 A, high efficiency single inductor dual mode buck-boost DC-DC converter

Preliminary data

Features

- Buck-boost DC-DC converter
- Operating input voltage range from 2.0 V to 5.5 V
- 2% DC feedback voltage tolerance
- Synchronous rectification
- Shutdown function
- 1.5 MHz switching frequency
- Power save mode at light load
- Typical efficiency: > 94 %
- 1 A output current capability
- Shutdown current < 1 µA
- Available in DFN10 3 x 3 mm

Application

- Single cell LI-ION and 3 cells alkaline, NI-MH powered devices
- Memory SD/MMC cards supply
- Palmtop computers
- Cell phones
- Digital cameras

Description

The STBB1 is a fixed frequency, high efficiency, Buck-boost DC-DC converter able to provide output voltages ranging from 1.2 V to 5.5 V and input voltage from 2.0 V to 5.5 V. The device can operate with input voltages higher, equal or lower than the output voltage making the product suitable for single lithium-Ion, multicell alkaline or NiMH applications where the output voltage is within the battery voltage range.

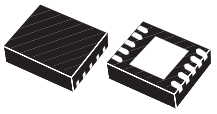

DFN10 (3 x 3 mm)

The integrated low-R_{DSon} N-channel and P-channel MOSFET switches contribute to achieve high efficiency.

The MODE pin allows selecting between auto mode and forced PWM mode thus taking benefit either of lower power consumption or best dynamic performance. The device includes also soft-start control, thermal shutdown and current limit. The STBB1 is packaged in DFN10 3x3 mm.

Table 1. Device summary

Order codes	Marking	Output voltage
STBB1-18PUR	BB1 18	1.8 V
STBB1-25PUR	BB1 25	2.5 V
STBB1-28PUR	BB1 28	2.8 V
STBB1-33PUR	BB1 33	3.3 V
STBB1PUR	BB1	ADJ

This is preliminary information on a new product in development or undergoing evaluation. Details are subject to change without notice.

Contents

1 Diagram 3

2 Absolute maximum ratings 4

3 Pin configuration 5

4 Typical application 6

5 Electrical characteristics 7

6 Detailed description 9

6.1 General description 9

6.2 Dual mode operation 9

6.3 External synchronization 10

6.4 Enable pin 10

6.5 Protections 10

6.5.1 Soft start and short circuit 10

6.5.2 Under voltage lockout 10

6.5.3 Over-temperature protection 10

7 Typical performance characteristics 11

8 Application information 13

8.1 Programming the output voltage 13

8.2 Inductor selection 13

8.3 Input and output capacitor selection 14

9 Recommended PCB layout 15

10 Package mechanical data 16

11 Revision history 19

1 Diagram

Figure 1. Block diagram

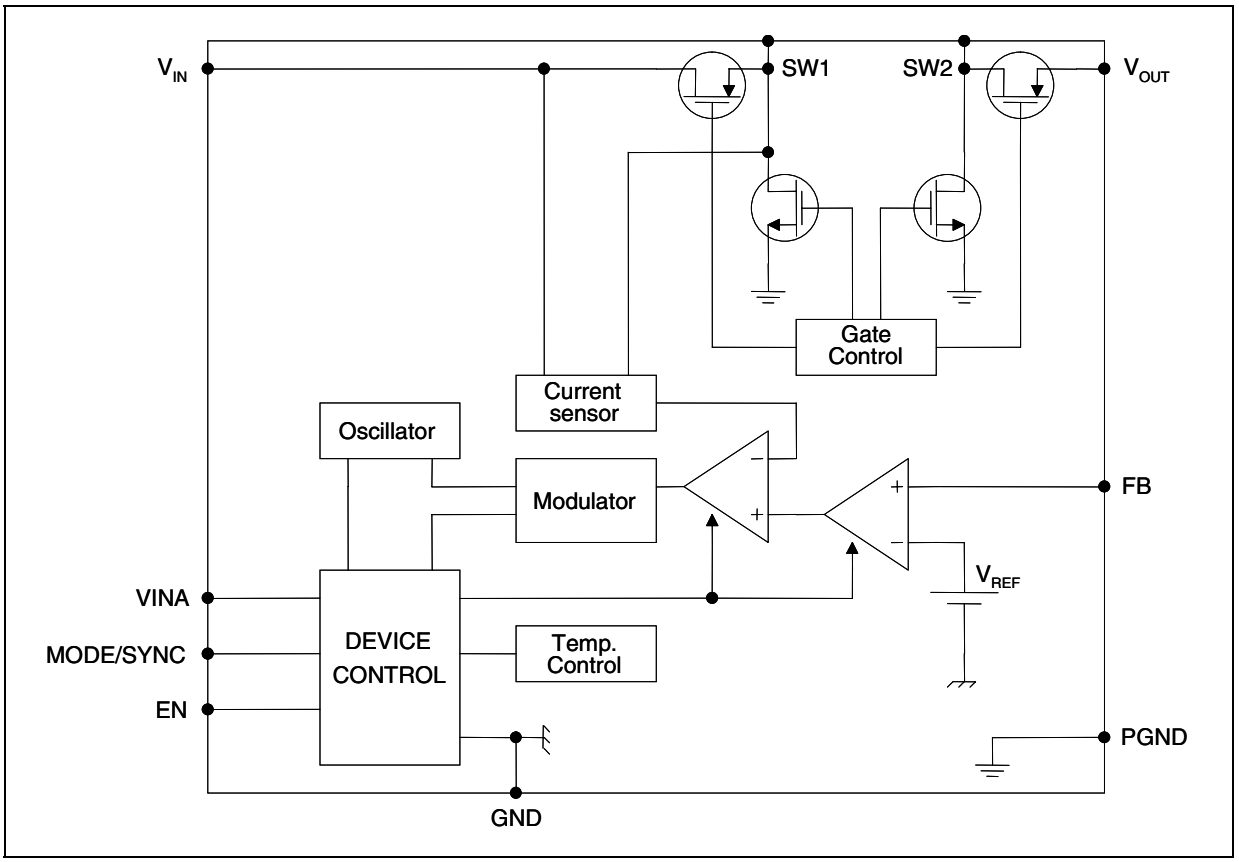

2 Absolute maximum ratings

Table 2. Absolute maximum ratings

Symbol	Parameter	Value	Unit
VINA, VIN	Input voltage	- 0.3 to 7	V
VOUT	Output voltage	- 0.3 to 7	V
SW1, SW2	DC voltage	- 0.3 to 7	V
FB	DC voltage	- 0.3 to 1.5	V
MOD/SYNC, EN	DC voltage	- 0.3 to 7	V
T_J	Maximum junction temperature	150	°C
T_{STG}	Storage temperature range	- 65 to + 150	°C
T_{JOP}	Operating junction temperature range	- 40 to + 85	°C
ESD	Human body model	2	kV

Note: Absolute maximum ratings are those values beyond which damage to the device may occur. Functional operation under these conditions is not implied.

Table 3. Thermal data

Symbol	Parameter	Value	Unit
R_{thJC}	Thermal resistance junction-case	2.96	°C/W
R_{thJA}	Thermal resistance junction-ambient	30.9	°C/W

3 Pin configuration

Figure 2. Pin connections (top view)

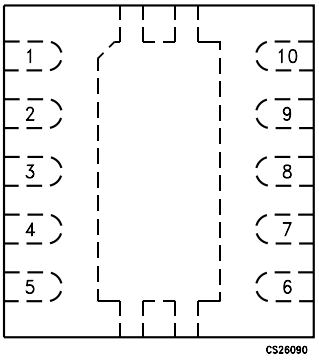

Table 4. Pin description

Pin n°	Symbol	Name and function
1	VOUT	Output voltage
2	SW2	Switch pin - Internal switches are connected to this pin. Connect inductor between SW1 to SW2
3	PGND	Power ground
4	SW1	Switch pin - Internal switches are connected to this pin. Connect inductor between SW1 and SW2
5	VIN	Power input voltage. Connect a ceramic bypass capacitor (10 µF minimum) between this pin and PGND
6	EN	Enable pin. Connect this pin to GND or a voltage lower than 0.4 V to shut down the IC. A voltage higher than 1.2 V is required to enable the IC.
7	MODE (SYNC)	Operation mode selection. If MODE pin is low, the STBB1 automatically switches between pulse skipping and fixed frequency PWM according to the load level. If MODE pin is pulled high, the STBB1 works always in PWM mode. When a square waveform is applied, this pin provides the clock signal for oscillator synchronization
8	VINA	Supply voltage for control stage
9	GND	Signal ground
10	FB	Feedback voltage
	Exposed pad	Power ground

4 Typical application

Figure 3. Application circuit adjustable version

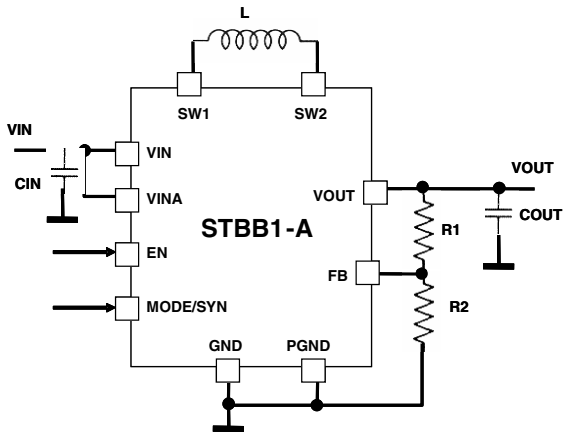

Figure 4. Application circuit fixed output voltage

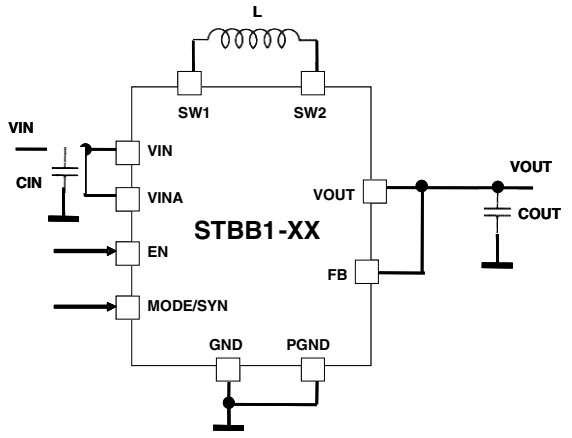

Table 5. List of external components (1)

Component	Manufacturer	Part number	Value	Size
CIN	Murata	GRM188R60J106ME47D	10 µF	0603
COUT	Murata	GRM188R60J106ME47D	10 µF	0603
L	TDK	VLCF4020T-2R2N1R7	2.2 µH	4 x 4 x 2 mm
R1		560 kΩ (V_O = 3.3 V)	(2)	0402
R2		100 kΩ		0402

1. Above listed components refer to typical application. Operation of the STBB1 is not limited to the choice of these external components.
2. R1 and R2 are calculated according to the following formula.

R1 = R2 x (VOUT/VFB - 1).

Suggested value for R2 is 100 kΩ. In order to reduce the quiescent current a maximum value of 500 kΩ is possible.

5 Electrical characteristics

(V_{IN} = V_{INA} = V_{EN} = 3.6 V, C_{IN} = 10 µF, C_{OUT} = 10 µF, L = 2.2 µH, T_J = - 40 to 85°C (unless otherwise specified; typical values are referred to T_A = 25°C)

Table 6. Electrical characteristics

Symbol	Parameter	Test conditions	Min.	Typ.	Max.	Unit
V_{IN}	Input voltage range		2.0		5.5	V
V_{UVLO}	Under voltage lockout threshold	VINA rising		1.70	1.80	V
		VINA falling	1.50	1.60		
V_{FB}	Feedback voltage		485	500	515	mV
		T_J = 25°C	490	500	510	mV
V_{OUT}	Output voltage range		1.2		5.5	V
Z_{FB}	FB input impedance			10		MΩ
I_Q	No switching quiescent current (VIN+VINA) (see *Figure 3*, *4*)	FB = 0.7 V, V_{MODE} = 0 V		160	250	µA
		FB = 0.7 V, V_{MODE} = V_{IN}		600	750	
I_Q	Operating quiescent current (VIN+VINA)	I_{OUT} = 0 A, V_{OUT} = 3.3 V, V_{MODE} = 0 V		200		µA
		I_{OUT} = 0 A, V_{OUT} = 3.3 V, V_{MODE} = V_{IN}		3.4	5.0	mA
I_{QSHDN}	Shutdown quiescent current	V_{EN} = 0 V, V_{IN} = 3.6 V		0.1	1	µA
Freq	Oscillator frequency		1300	1500	1750	kHz
	Frequency range for synchronization		1300		2000	
V_{EN}	Enable input logic low	V_{IN} = 2.2V to 5.5V			0.4	V
	Enable input logic high	V_{IN} = 2.2V to 5.5V	1.2			
I_{EN}	Enable pin current	V_{EN} = 5.5V		0.01	1	µA
$V_{MODE/SYNC}$	MODE/SYNC input logic low	V_{IN} = 2.2V to 5.5V			0.4	V
	MODE/SYNC input logic high	V_{IN} = 2.2V to 5.5V	1.2			
$I_{MODE/SYNC}$	MODE/SYNC pin current	$V_{MODE/SYNC}$ = 5.5V		0.01	1	µA
$\%V_{OUT}$	Line regulation	2.2V<V_{IN}<5.5V; I_{OUT}=1mA		0.5		%
$\%V_{OUT}$	Load regulation	10mA<I_{OUT}<1000mA		1		%
I_{SWL}	Switch current limitation	V_{IN} = 3.3 V	1.6	2.3	2.4	A
I_{LKN}	NMOS leakage current	V_{IN} = 5.5 V		0.01	1	µA
I_{LKP}	PMOS leakage current			0.01	1	µA
RDSon-N	NMOS switch on resistance			0.13	0.35	Ω
RDSon-P	PMOS switch on resistance			0.13	0.35	Ω
ν	Efficiency, V_{IN} = 3.6 V, V_{OUT} = 3.3 V	I_{OUT}=10mA; V_{MODE}=0		89		%
		I_{OUT}=10mA; V_{MODE}=V_{IN}		67		
		I_{OUT}=100mA; V_{MODE}=V_{IN}		94		

Table 6. Electrical characteristics (continued)

Symbol	Parameter	Test conditions	Min.	Typ.	Max.	Unit
T_{SHDN}	Thermal shut down			140		°C
T_{HYS}	Thermal shut down hysteresis			20		°C

6 Detailed description

6.1 General description

The STBB1 is a high efficiency dual mode buck-boost switch mode converter. Thanks to the internal 4 switches, 2 P-channel and 2 N-channel, and its particular control technique it is able to deliver e well regulated output voltage with a variable input voltage which can be higher, equal or lower than the desired output voltage. This solves most of the power supply problems that circuit designers face when dealing with battery powered equipment.

The controller uses an average current mode technique in order to obtain good stability in all possible conditions of input voltage, output voltage and output current. In addition the peak inductor current is monitored in order to avoid saturation of the coil.

The STBB1 can work in two different modes: PWM mode or power save mode. In the first case the device operates with a fixed oscillator frequency in all line/load conditions. This is the suitable condition to obtain the maximum dynamic performances. In the second case the device operates in burst mode allowing a drastic reduction of power consumption.

Top-class line and load transients are achieved thanks to feed-forward technique and due to the innovative control method specifically designed to optimize the performances in the buck-boost region where input voltage is very close to the output voltage.

The STBB1 is self protected by short circuit, over-temperature and adjustable version. Under voltage lockout and soft start guarantee proper operation during start-up.

Input voltage and ground connections are split in power and signal pins. This allows reducing internal disturbances when the 4 internal switches are working. The switches bridge is connected between VIN and PGND pins while all logic blocks are connected between VINA and GND.

6.2 Dual mode operation

The STBB1 works in PWM or in power save (PS) mode according to the different operating conditions.

If the Mode pin is pulled high the device works always in PWM mode even at light or no load. In this condition STBB1 provides the best dynamic performances.

If MODE pin is logic low, the STBB1 operation changes according to the average input current handled by the device.

At low average current the STBB1 enters in PS mode allowing very low power consumption and thus obtaining very good efficiency event at light load. When the average current increases, the device automatically switches to PWM mode in order to deliver the power needed by the load.

In PS mode the STBB1 implements a burst mode operation. If the output voltage increases above its nominal value the device stops switching. As soon the V_{OUT} falls below the nominal value the device starts switching again with a programmed average current higher than the one needed by the load. *Figure 8* in Section 7 shows PS mode operation areas vs output current in typical application conditions.

6.3 External synchronization

The STBB1 implements external synchronization pin. If and external clock signal is applied to the MODE (SYN) pin with a frequency between 1.35 MHz and 2.0 MHz and with proper low/high levels, the device automatically goes in PWM mode and the external clock is used as switching oscillator.

6.4 Enable pin

The device operates when EN pin is set high. If EN pin is set low the device stops switching, all the internal blocks are turned off. In this condition the current drawn from VIN/VINA is below 1 µA in the whole temperature range. In addition the internal switches are in off state so the load is electrically disconnected from the input, this avoids unwanted current leakage from the input to the load.

6.5 Protections

The STBB1 implements different type of protections.

6.5.1 Soft start and short circuit

After the EN pin is pulled high, or after a suitable voltage is applied to VIN, VINA and EN the device initiates the start-up phase. The average current limit is set to 400 mA at the beginning and it is gradually increased tracking the output voltage increase. As soon the output voltage reaches 1.0 V the average current limit is set to its nominal value.

This method allows having a current limit proportional to the output voltage, if there is a short in the V_{OUT} pin, the output current will not exceed 400 mA.

This process is not handled by any timer so the device is also able to start-up in case of large capacitive loads.

6.5.2 Under voltage lockout

The under voltage lockout function avoids improper operation of STBB1 when the input voltage is not high enough. When the input voltage is below the VUVLO threshold the device is in shutdown mode. The hysteresis of 100 mV avoids unstable operation when the input voltage is close to the UVLO threshold.

6.5.3 Over-temperature protection

An internal temperature sensor continuously monitors the IC junction temperature. If the IC temperature exceeds 140 °C typically the device stops operating. As soon the temperature falls below 120 °C typically normal operation is restored.

7 Typical performance characteristics

(L = 2.2 µH, V_O = 3.3 V, all the measurements done with circuit shown in *Figure 3* and external components listed in *Table 5*)

Figure 5. Efficiency vs I_{OUT} in auto mode

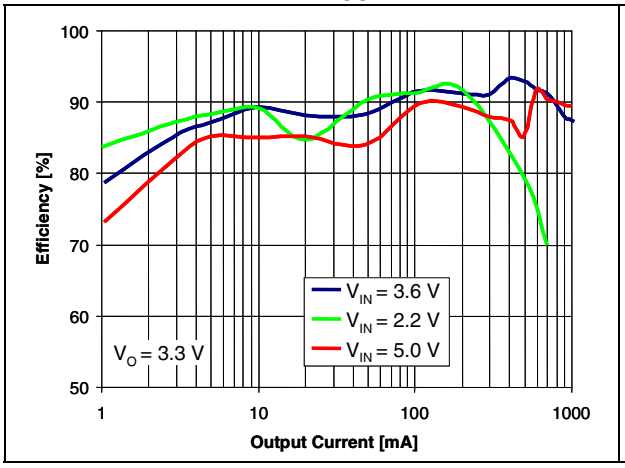

Figure 6. Efficiency vs I_{OUT} in PWM mode

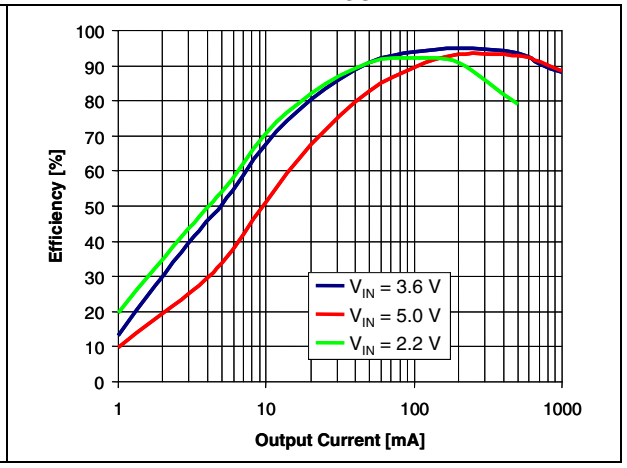

Figure 7. Efficiency vs V_{IN}, I_{OUT} = 550 mA

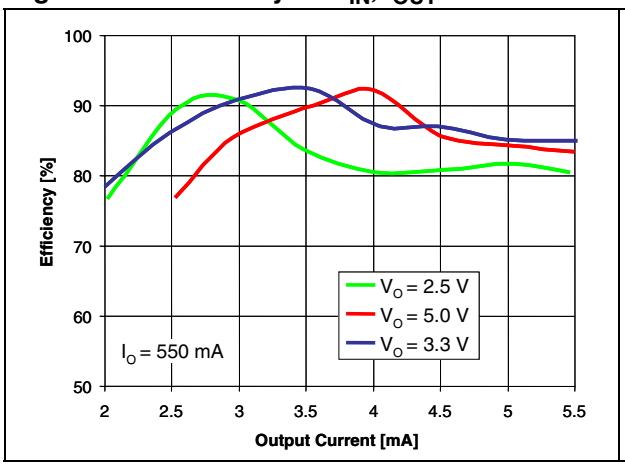

Figure 8. PS to PWM transition

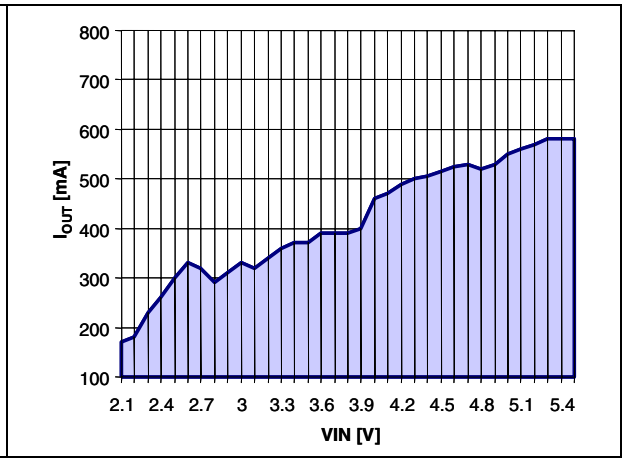

Figure 9. Max I_{OUT} vs V_{IN}

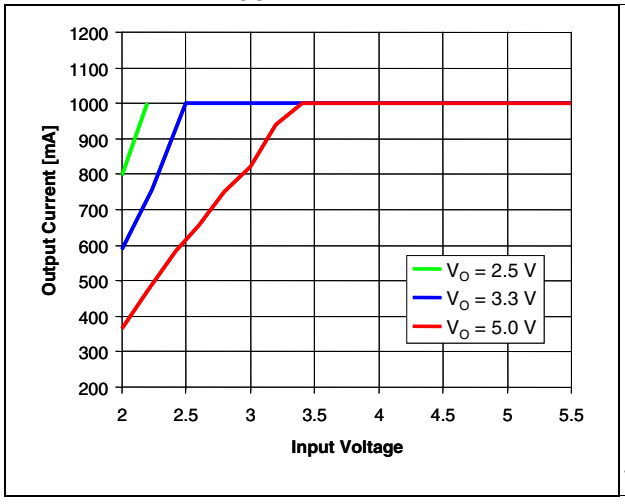

Figure 10. Boost region operation

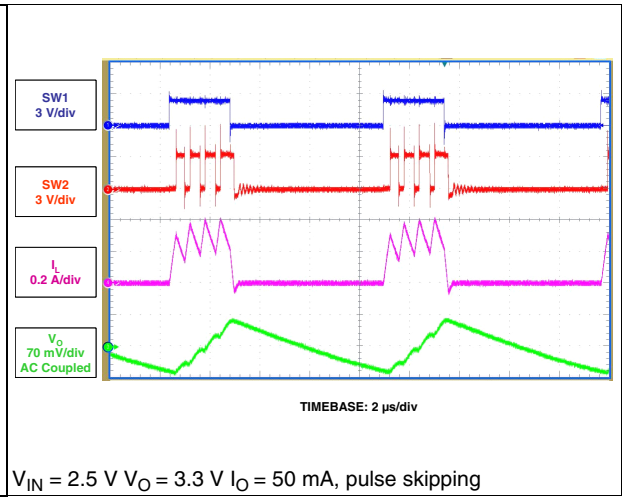

V_{IN} = 2.5 V V_O = 3.3 V I_O = 50 mA, pulse skipping

Figure 11. Boost region operation

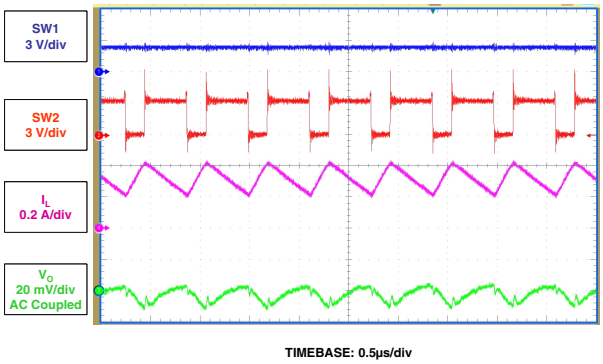

V_{IN} = 2.5 V V_O = 3.3 V I_O = 200 mA, PWM mode

Figure 12. Buck-boost region operation

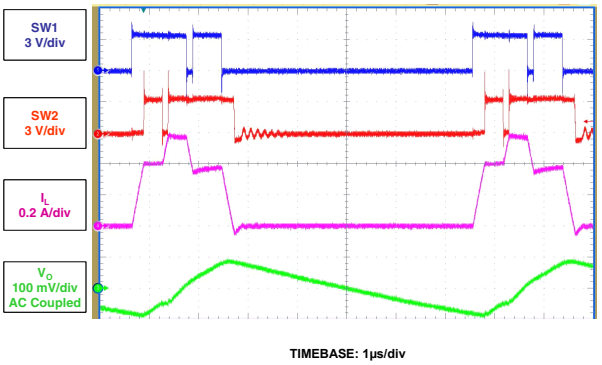

V_{IN} = 3.6 V V_O = 3.3 V I_O = 100 mA, pulse skipping mode

Figure 13. Buck-boost region operation

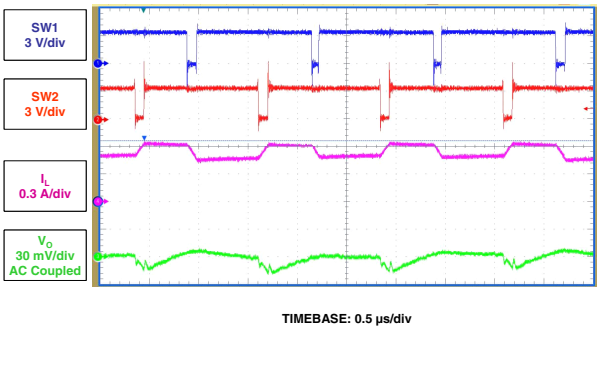

V_{IN} = 3.6 V V_O = 3.3 V I_O = 500 mA, PWM mode

Figure 14. Buck-boost region operation

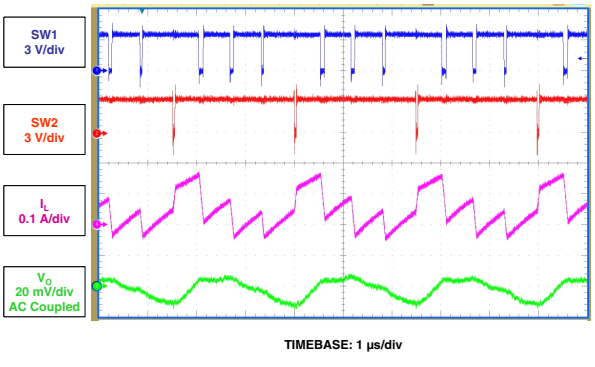

V_{IN} = 3.6 V V_O = 3.3 V I_O = 50 mA, PWM mode

Figure 15. Buck region operation

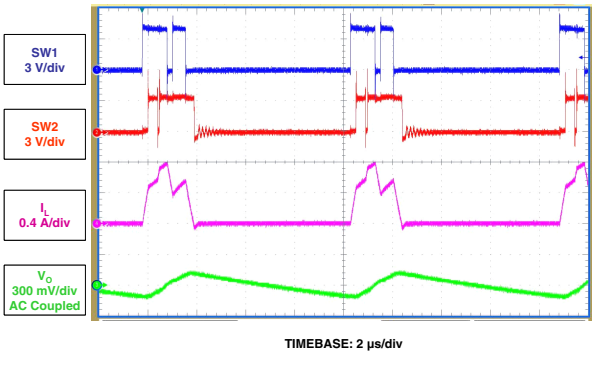

V_{IN} = 4.2 V V_O = 3.3 V I_O = 100 mA, pulse skipping mode

Figure 16. Buck region operation

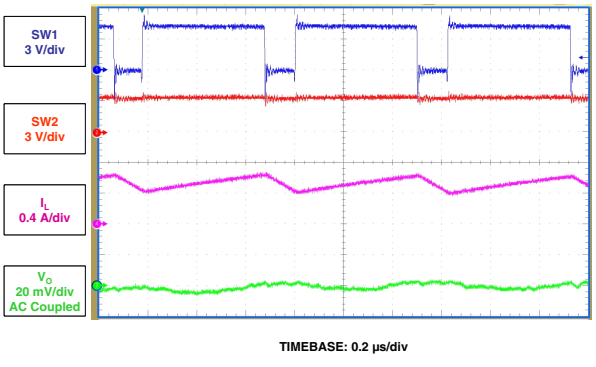

V_{IN} = 4.2 V V_O = 3.3 V I_O = 500 mA, PWM mode

8 Application information

8.1 Programming the output voltage

The STBB1 is available in several two types of version: fixed output voltage (STBB1-xx) and adjustable output voltage (STBB1-A).

In the first case the device integrates the resistor divider needed to set the right output voltage. This allows saving 2 external components. The FB pin must be connected directly to V_{OUT}.

For the adjustable version, the resistor divider must be connected between V_{OUT} and GND and the middle point of the divider must be connected to FB as shown in *Figure 4*.

Equation 1

$$R1 = R2 \times \left(\frac{V_{OUT}}{V_{FB}} - 1 \right)$$

A suggested value for R2 is 100 kΩ, anyhow, in order to reduce the power consumption a maximum value of 500 kΩ can be used.

8.2 Inductor selection

The inductor is the key passive component for switching converters. In case of buck-boost device, the inductor selection must take into consideration the boundary conditions in which the converter works as buck at the maximum input voltage and as a boost at the minimum input voltage.

Two critical inductance values are then obtained according to the following formulas:

Equation 2

$$L_{MIN-BUCK} = \frac{VOUT \times (VIN_{MAX} - VOUT)}{VIN_{MAX} \times fs \times \Delta I_L}$$

Equation 3

$$L_{MIN-BOOST} = \frac{VIN_{MIN} \times (VOUT - VIN_{MIN})}{VOUT \times fs \times \Delta I_L}$$

Where:

Fs: minimum switching frequency;

ΔIL = is the peak-to-peak inductor ripple current. As a rule of thumb, the peak-to-peak ripple can be set at 10 % - 20 % of the output current.

The minimum inductor value for the application is the higher between *Equation 2* and *Equation 3*. In addition, to the inductance value also the maximum current the inductor can handle must be calculated in order to avoid saturation.

Equation 4

$$I_{PEAK-BUCK} = I_{OUT} \times \frac{VOUT \times (VIN_{MAX} - VOUT)}{2 \times VIN_{MAX} \times fs \times L}$$

Equation 5

$$I_{PEAK-BOOST} = \frac{VOUT \times I_{OUT}}{\eta \times VIN_{MIN}} \times \frac{VIN_{MIN} \times (VOUT - VIN_{MIN})}{2 \times VOUT \times fs \times L}$$

The maximum of the two values above must be considered when selecting the inductor.

8.3 Input and output capacitor selection

It is recommended to use ceramic capacitors with low ESR as input and output capacitors in order to filter any disturbance present in the input line and to get stable operation. Minimum values of 10 µF for both capacitors are needed to achieve a good behavior of the device.

The input capacitor must be placed as close as possible to the device.

9 Recommended PCB layout

Figure 17. Component placement

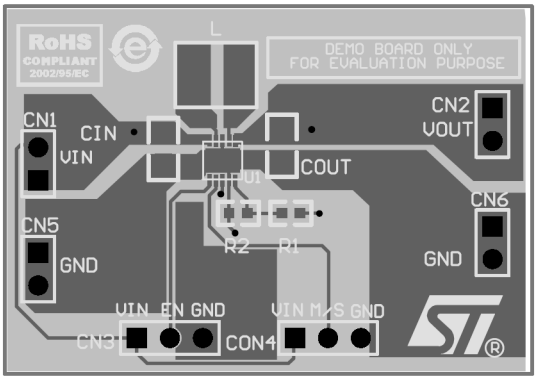

Figure 18. Top layer routing

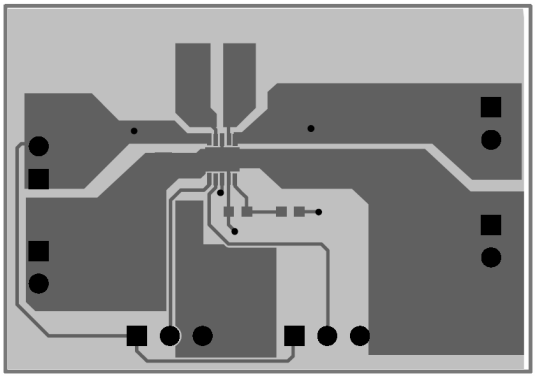

Figure 19. Bottom layer routing

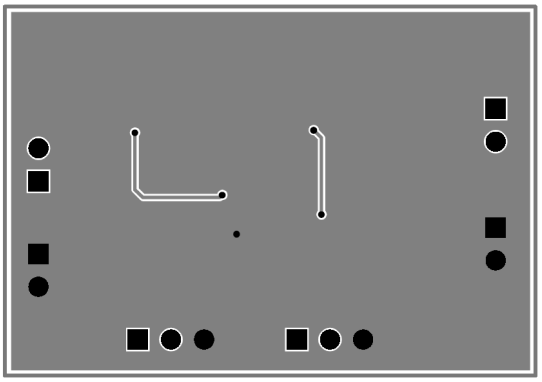

10 Package mechanical data

In order to meet environmental requirements, ST offers these devices in different grades of ECOPACK® packages, depending on their level of environmental compliance. ECOPACK® specifications, grade definitions and product status are available at: www.st.com. ECOPACK® is an ST trademark.

DFN10 (3x3 mm) mechanical data

Dim.	mm.			mils.		
	Min.	Typ.	Max.	Min.	Typ.	Max.
A	0.80	0.90	1.00	31.5	35.4	39.4
A1		0.02	0.05		0.8	2.0
A2	0.55	0.65	0.80	21.7	25.6	31.5
A3		0.20			7.9	
b	0.18	0.25	0.30	7.1	9.8	11.8
D	2.85	3.00	3.15	112.2	118.1	124.0
D2	2.20			86.6		
E	2.85	3.00	3.15	112.2	118.1	124.0
E2	1.40		1.75	55.1		68.9
e		0.50			19.7	
L	0.30	0.40	0.50	11.8	15.7	19.7
ddd			0.08			3.1

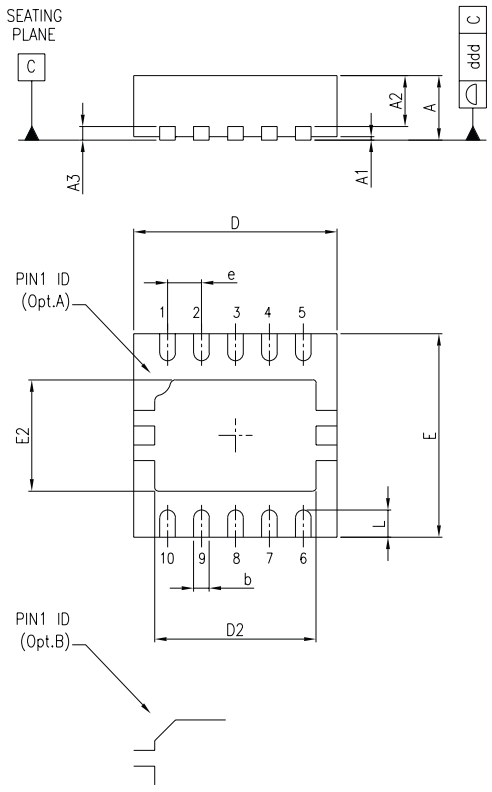

7426335F

Tape & reel QFNxx/DFNxx (3x3) mechanical data

Dim.	mm.			inch.		
	Min.	Typ.	Max.	Min.	Typ.	Max.
A			180			7.087
C	12.8		13.2	0.504		0.519
D	20.2			0.795		
N	60			2.362		
T			14.4			0.567
Ao		3.3			0.130	
Bo		3.3			0.130	
Ko		1.1			0.043	
Po		4			0.157	
P		8			0.315	

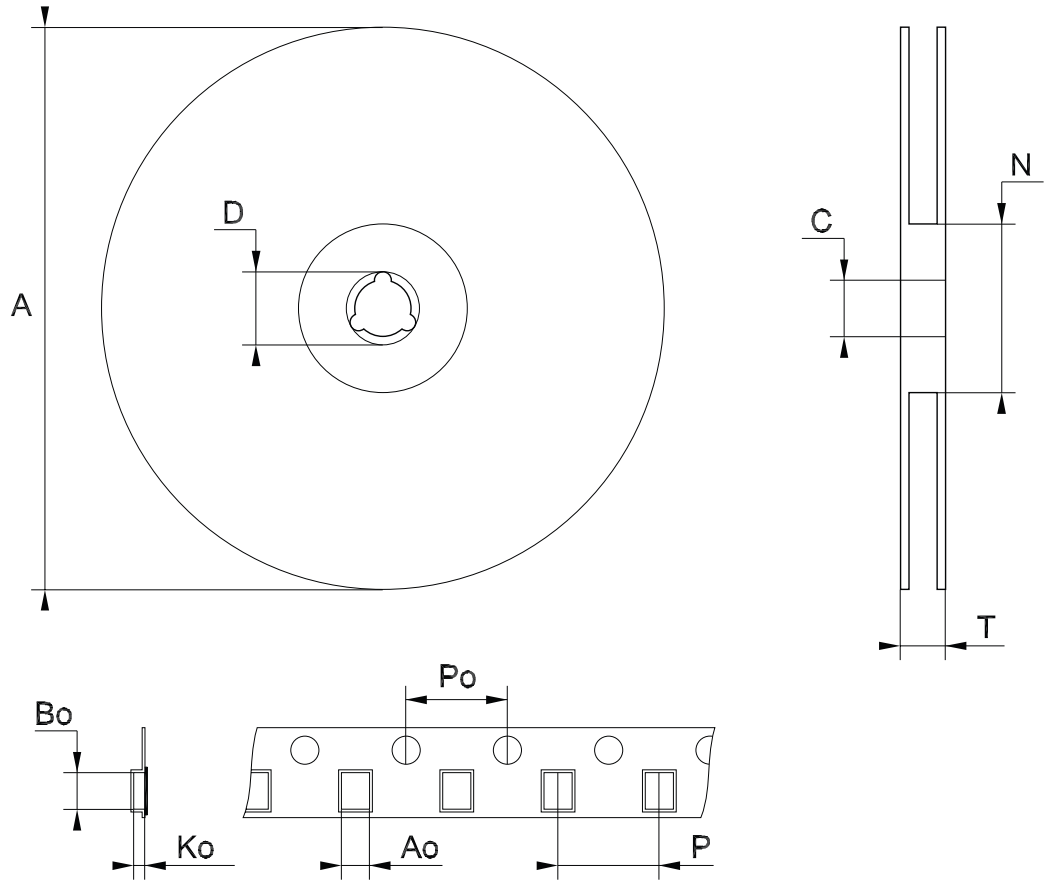

Note: Drawing not in scale

11 Revision history

Table 7. Document revision history

Date	Revision	Changes
09-Feb-2009	1	First release.

Please Read Carefully:

Information in this document is provided solely in connection with ST products. STMicroelectronics NV and its subsidiaries (“ST”) reserve the right to make changes, corrections, modifications or improvements, to this document, and the products and services described herein at any time, without notice.

All ST products are sold pursuant to ST’s terms and conditions of sale.

Purchasers are solely responsible for the choice, selection and use of the ST products and services described herein, and ST assumes no liability whatsoever relating to the choice, selection or use of the ST products and services described herein.

No license, express or implied, by estoppel or otherwise, to any intellectual property rights is granted under this document. If any part of this document refers to any third party products or services it shall not be deemed a license grant by ST for the use of such third party products or services, or any intellectual property contained therein or considered as a warranty covering the use in any manner whatsoever of such third party products or services or any intellectual property contained therein.

UNLESS OTHERWISE SET FORTH IN ST’S TERMS AND CONDITIONS OF SALE ST DISCLAIMS ANY EXPRESS OR IMPLIED WARRANTY WITH RESPECT TO THE USE AND/OR SALE OF ST PRODUCTS INCLUDING WITHOUT LIMITATION IMPLIED WARRANTIES OF MERCHANTABILITY, FITNESS FOR A PARTICULAR PURPOSE (AND THEIR EQUIVALENTS UNDER THE LAWS OF ANY JURISDICTION), OR INFRINGEMENT OF ANY PATENT, COPYRIGHT OR OTHER INTELLECTUAL PROPERTY RIGHT.

UNLESS EXPRESSLY APPROVED IN WRITING BY AN AUTHORIZED ST REPRESENTATIVE, ST PRODUCTS ARE NOT RECOMMENDED, AUTHORIZED OR WARRANTED FOR USE IN MILITARY, AIR CRAFT, SPACE, LIFE SAVING, OR LIFE SUSTAINING APPLICATIONS, NOR IN PRODUCTS OR SYSTEMS WHERE FAILURE OR MALFUNCTION MAY RESULT IN PERSONAL INJURY, DEATH, OR SEVERE PROPERTY OR ENVIRONMENTAL DAMAGE. ST PRODUCTS WHICH ARE NOT SPECIFIED AS "AUTOMOTIVE GRADE" MAY ONLY BE USED IN AUTOMOTIVE APPLICATIONS AT USER’S OWN RISK.

Resale of ST products with provisions different from the statements and/or technical features set forth in this document shall immediately void any warranty granted by ST for the ST product or service described herein and shall not create or extend in any manner whatsoever, any liability of ST.

ST and the ST logo are trademarks or registered trademarks of ST in various countries.

Information in this document supersedes and replaces all information previously supplied.

The ST logo is a registered trademark of STMicroelectronics. All other names are the property of their respective owners.

© 2009 STMicroelectronics - All rights reserved

STMicroelectronics group of companies

Australia - Belgium - Brazil - Canada - China - Czech Republic - Finland - France - Germany - Hong Kong - India - Israel - Italy - Japan - Malaysia - Malta - Morocco - Singapore - Spain - Sweden - Switzerland - United Kingdom - United States of America

www.st.com